Cadillac CTS Panel Identification

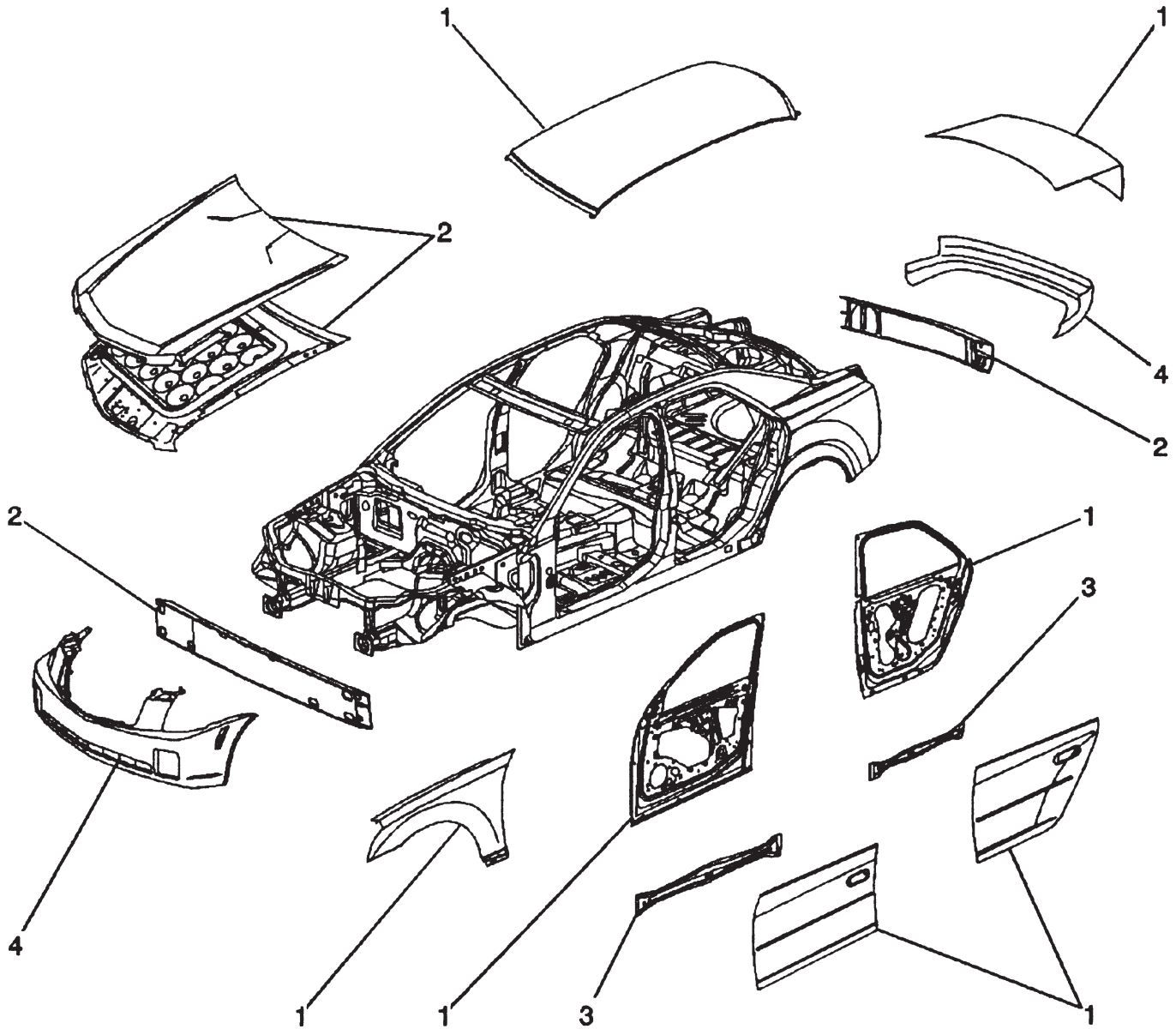

1 – 2-Sided Galvanized Steel
2 – Aluminum
3 – High Strength Steel
4 – Thermoplastic Olefin (TPO)